Dunbarton CORPORATION

868 MURRAY ROAD, DOTHAN, AL 36303

ACHIEVER "ES"

Composite Frame System Utilizing a Steel Door Panel

INSWING
"NON-IMPACT"

GENERAL NOTES

1. This product has been evaluated and is in compliance with the 8th Edition (2023) Florida Building Code (FBC) structural requirements excluding the "High Velocity Hurricane Zone" (HVHZ).

2. Product anchors shall be as listed and spaced as shown on details. Anchor embedment to base material shall be beyond wall dressing or stucco.

3. When used in areas requiring wind borne debris protection this product is required to be protected with an impact resistant covering that complies with FBC Sections 1609.1.2 & R301.2.1.2.

4. For 2x stud framing construction, anchoring of these units shall be the same as that shown for 2x buck masonry construction.

5. Site conditions that deviate from the details of this drawing require further engineering analysis by a licensed engineer or registered architect.

TABLE OF CONTENTS

SHEET #	DESCRIPTION
1	Typical elevations, design pressures & general notes
2	Door panel details
3	Door panel details
4	Horizontal cross section
5	Vertical cross sections
6	Buck and frame anchoring - 2X wood buck construction
7	Frame anchoring - 1X wood buck
8	Bill of materials and components

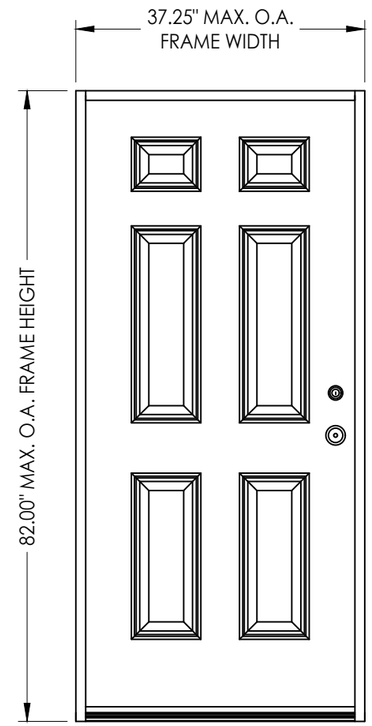

Opaque

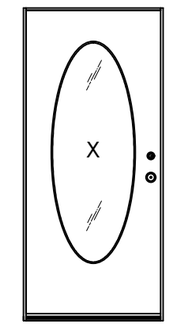

Oval Glazed

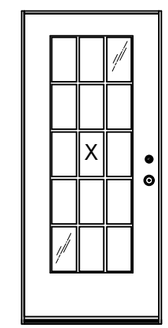

Rectangular Glazed

DOOR TYPE	OVERALL FRAME DIMENSION	OVERALL DOOR PANEL DIMENSION	DESIGN PRESSURE (PSF)	
			POSITIVE	NEGATIVE
Oval Glazed	37.25" X 82.00"	35.62" X 79.00"	+50.0	-55.0
Rectangular Glazed			+50.0	-55.0
Opaque			+65.0	-70.0

L F Schmidt

L. F. SCHMIDT LICENSE No. 43409 STATE OF FLORIDA PROFESSIONAL ENGINEER

Digitally signed by Lyndon F Schmidt
Date: 2023.07.06 18:22:21 -04'00'

This item has been digitally signed and sealed by **L. F. Schmidt, P.E.** on the date adjacent to the seal.

Printed copies of this document are not considered signed and sealed and the signature must be verified on any electronic copies.

THIS PRODUCT APPROVAL IS VALID ONLY FOR THE STATE OF FLORIDA

Documents Prepared By:
Lyndon F. Schmidt
P.E. No. 43409

RW BUILDING CONSULTANTS, INC.
P.O. Box 230, Valrico, FL 33595
Phone No.: 813.659.9197
FBPE Registry No. 9813

PRODUCT: DUNBARTON ACHIEVER "ES" INSWING "NON-IMPACT"

PART OR ASSEMBLY: TYPICAL ELEVATION, DESIGN PRESSURES & GENERAL NOTES

NO.	DATE	BY
4	7/06/23	UPDATE TO 8TH ED. (2023) FBC	LFS
3	8/11/20	UPDATE TO 7TH ED. (2020) FBC	DAC
2	9/29/17	UPDATE TO 6TH ED. (2017) FBC	LFS
1	3/23/15	UPDATE TO 5TH ED. (2014) FBC	JK

REVISIONS

DATE: 3/14/12
SCALE: N.T.S.
DWG. BY: JK
CHK. BY: LFS
DRAWING NO.: FL-15362.7
SHEET 1 OF 8

© 2012 R.W. BUILDING CONSULTANTS INC.

G:\2023 FBC DRAWINGS\Dunbarton Corp\FL-15362 R4 Achiever\FL-15362.7-12.dwg

HARDWARE TABLE	
MANUFACTURER	MODEL
PAMEX	KNOB: FT3 SERIES DEADBOLT: FD2 SERIES

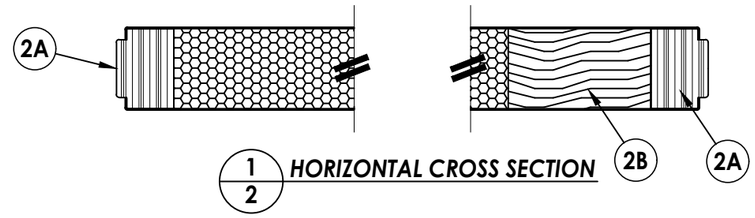

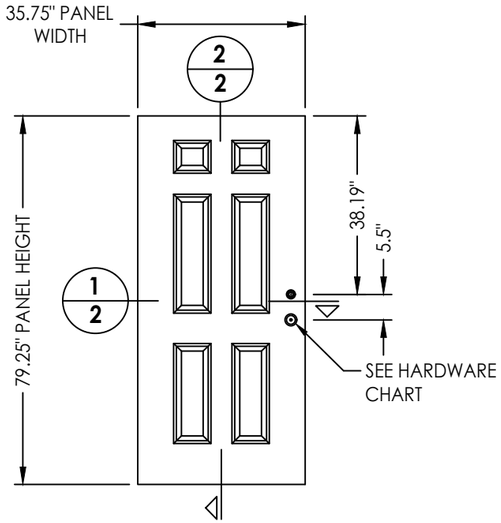

JELD-WEN DOOR PANEL
(Steel)

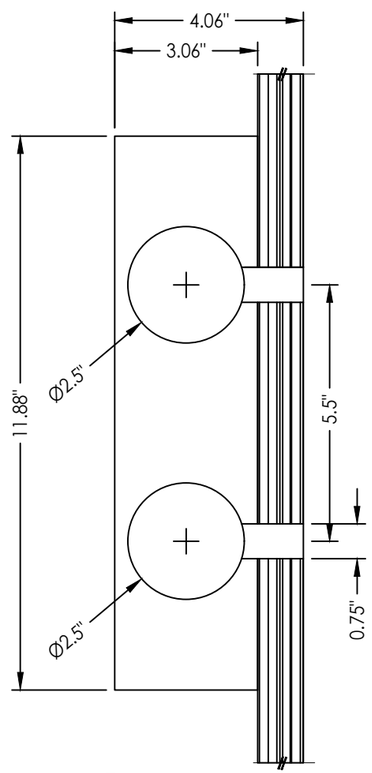

2B LOCK BLOCK

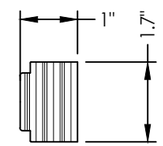

2A STILE
LVL

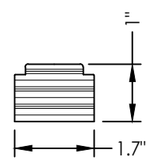

2C TOP RAIL
LVL

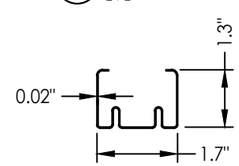

2D BOTTOM RAIL
Steel

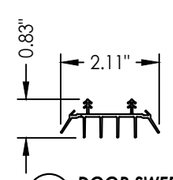

2E DOOR SWEEP

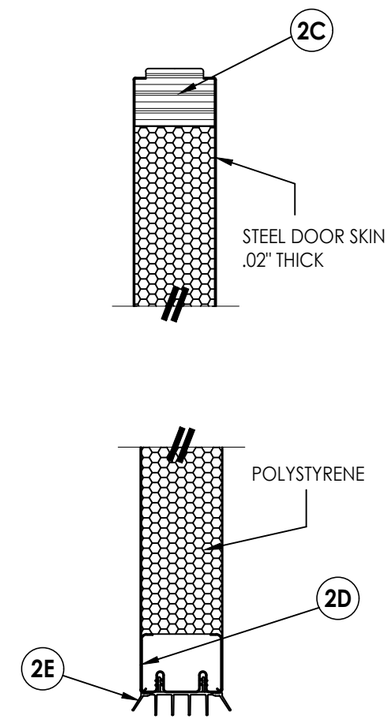

2/2 VERTICAL CROSS SECTION

Documents Prepared By:
Lyndon F. Schmidt
P.E. No. 43409

R.W. BUILDING CONSULTANTS, INC.
P.O. Box 230, Valrico, FL 33595
Phone No.: 813.659.9197
FBPE Registry No. 9813

PRODUCT: DUNBARTON ACHIEVER "ES" INSWING "NON-IMPACT"

PART OR ASSEMBLY: DOOR PANEL DETAILS

REVISIONS

NO.	DATE		BY
4	7/06/23	UPDATE TO 8TH ED. (2023) FBC	LFS
3	8/11/20	UPDATE TO 7th ED. (2020) FBC	DAC
2	9/29/17	UPDATE TO 6TH ED. (2017) FBC	LFS
1	3/23/15	UPDATE TO 5TH ED. (2014) FBC	JK

DATE: 03/14/12
SCALE: N.T.S.
DWG. BY: JK
CHK. BY: LFS
DRAWING NO.: FL-15362.7
SHEET 2 OF 8

© 2012 R.W. Building Consultants Inc.

G:\2023 FBC DRAWINGS\Dunbarton Corp\FL-15362 R4 Achiever\FL-15362.7-12.dwg

HARDWARE TABLE		
MANUFACTURER	MODEL	
PAMEX	KNOB:	FT3 SERIES
	DEADBOLT:	FD2 SERIES

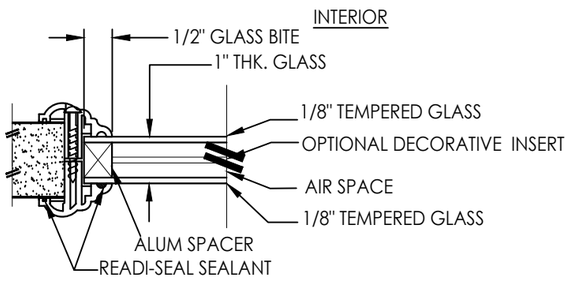

G2 **GLAZING DETAIL**
ODL HP Lite Frame

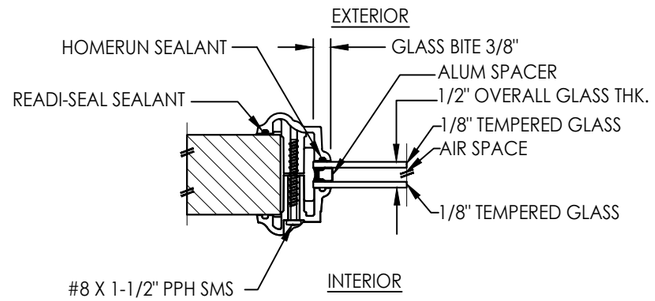

G1 **GLAZING DETAIL**
ODL HP Lite Frame

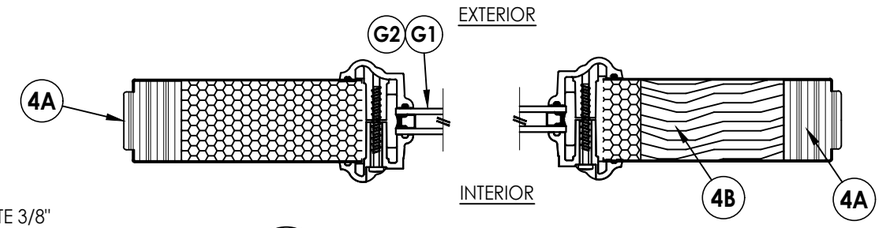

1/3 **HORIZONTAL CROSS SECTION**

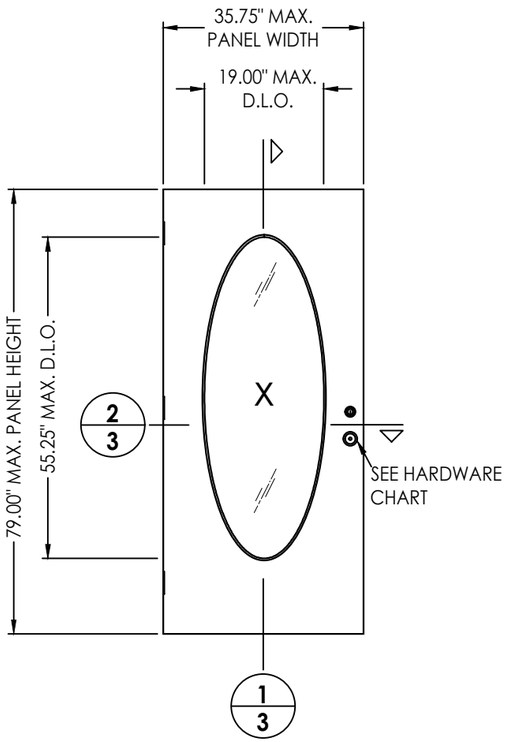

JELD-WEN STEEL DOOR PANEL
(Oval Glazed)

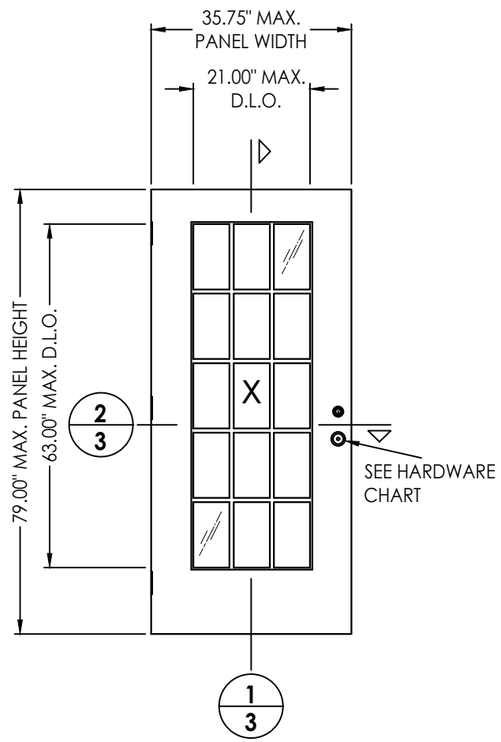

JELD-WEN STEEL DOOR PANEL
(Rectangular Glazed)

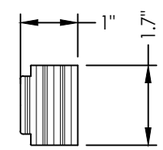

4A **STILE**
LVL

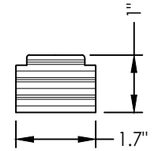

4C **TOP RAIL**
LVL

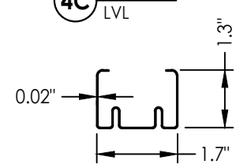

4D **BOTTOM RAIL**
Steel

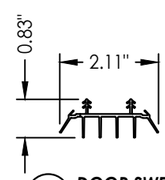

4E **DOOR SWEEP**

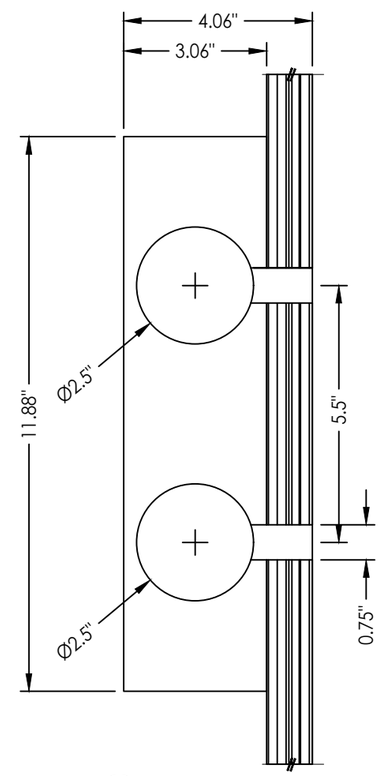

4B **LOCK BLOCK**

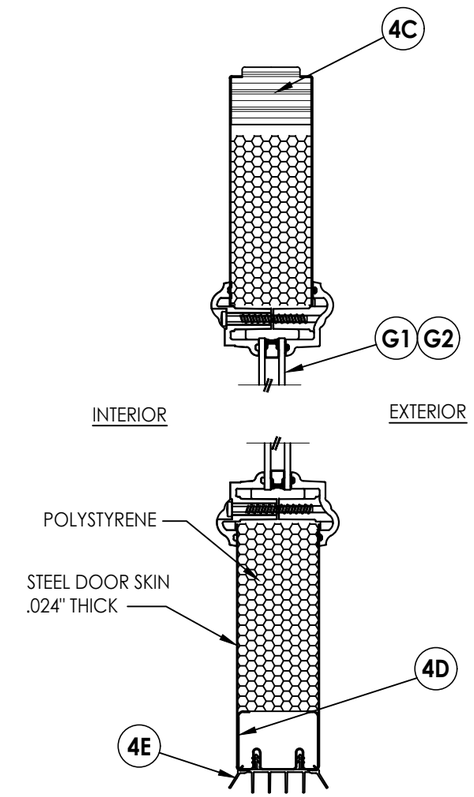

2/3 **VERTICAL CROSS SECTION**

Documents Prepared By:
Lyndon F. Schmidt
P.E. No. 43409

RW BUILDING CONSULTANTS, INC.
P.O. Box 230, Valrico, FL 33595
Phone No.: 813.659.9197
FBPE Registry No. 9813

PRODUCT: DUNBARTON ACHIEVER "ES" INSWING "NON-IMPACT"

PART OR ASSEMBLY: DOOR PANEL DETAILS

REVISIONS

NO.	DATE		BY
4	7/06/23	UPDATE TO 8TH ED. (2023) FBC	LFS
3	8/11/20	UPDATE TO 7th ED. (2020) FBC	DAC
2	9/29/17	UPDATE TO 6TH ED. (2017) FBC	LFS
1	3/23/15	UPDATE TO 5TH ED. (2014) FBC	JK

DATE: 03/14/12
SCALE: N.T.S.
DWG. BY: JK
CHK. BY: LFS
DRAWING NO.: FL-15362.7
SHEET 3 OF 8

© 2012 R.W. BUILDING CONSULTANTS INC.

G:\2023 FBC DRAWINGS\Dunbarton Corp\FL-15362 R4 Achiever\FL-15362.7-12.dwg

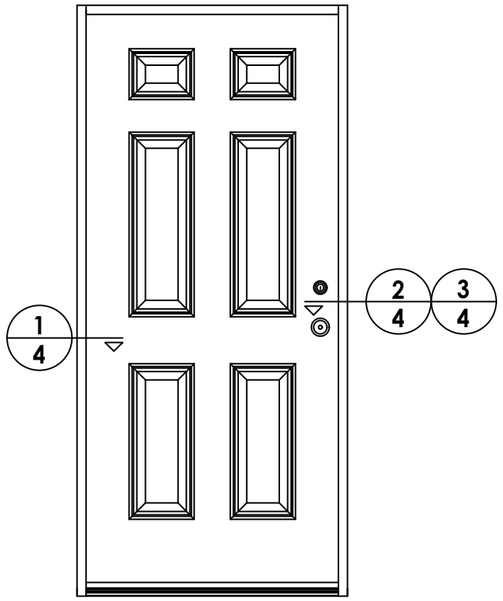

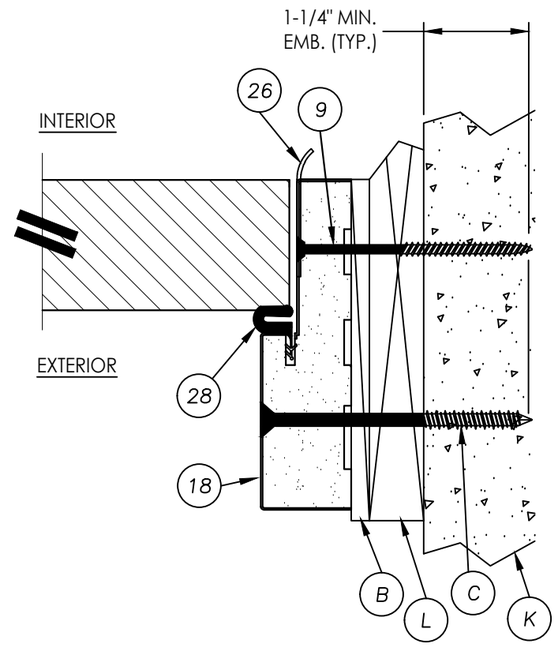

3/4 HORIZONTAL CROSS SECTION
Shown w/1X sub-buck

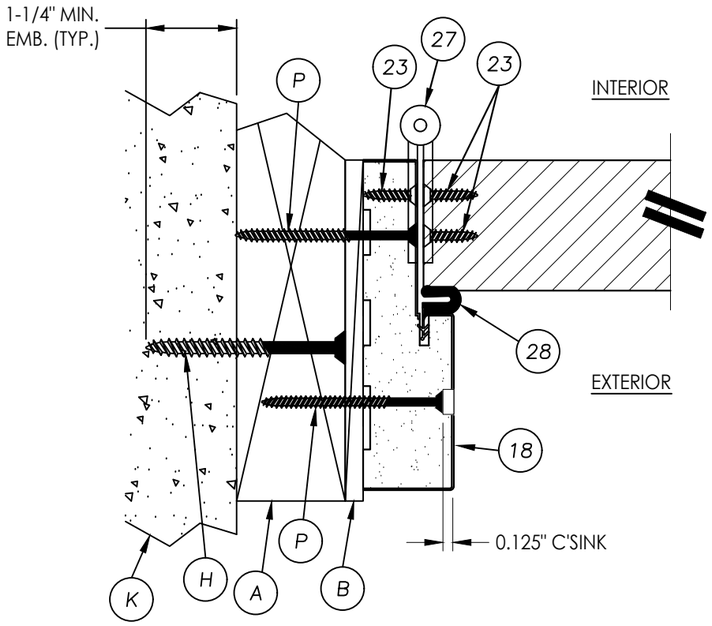

1/4 HORIZONTAL CROSS SECTION

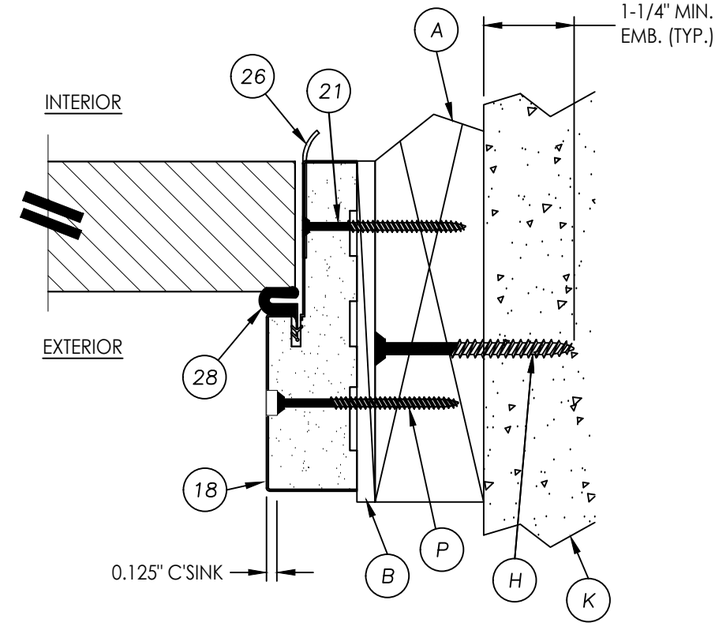

2/4 HORIZONTAL CROSS SECTION

Documents Prepared By:
Lyndon F. Schmidt
P.E. No. 43409
R.W. BUILDING CONSULTANTS, INC.
P.O. Box 230, Valrico, FL 33595
Phone No.: 813.659.9197
FBPE Registry No. 9813

PRODUCT: DUNBARTON ACHIEVER "ES" INSWING "NON-IMPACT"

PART OR ASSEMBLY: HORIZONTAL CROSS SECTIONS

REVISIONS

NO.	DATE		BY
4	7/06/23	UPDATE TO 8TH ED. (2023) FBC	LFS
3	8/11/20	UPDATE TO 7th ED. (2020) FBC	DAC
2	9/29/17	UPDATE TO 6TH ED. (2017) FBC	LFS
1	3/23/15	UPDATE TO 5TH ED. (2014) FBC	JK

DATE: 3/14/12
SCALE: N.T.S.
DWG. BY: JK
CHK. BY: LFS
DRAWING NO.: FL-15362.7
SHEET 4 OF 8

© 2012 R.W. Building Consultants Inc.

G:\2023 FBC DRAWINGS\Dunbarton Corp\FL-15362 R4 Achiever\FL-15362.7-12.dwg

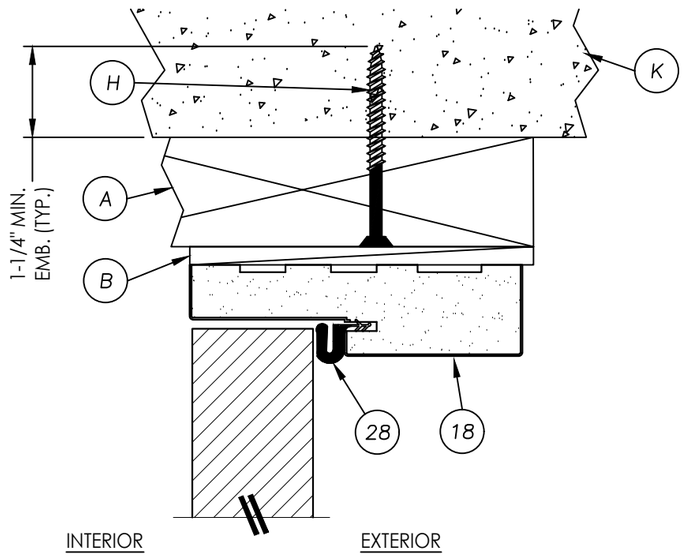

1/5 **VERTICAL CROSS SECTION**

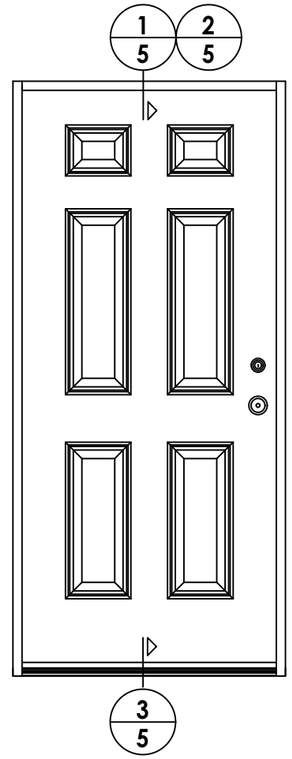

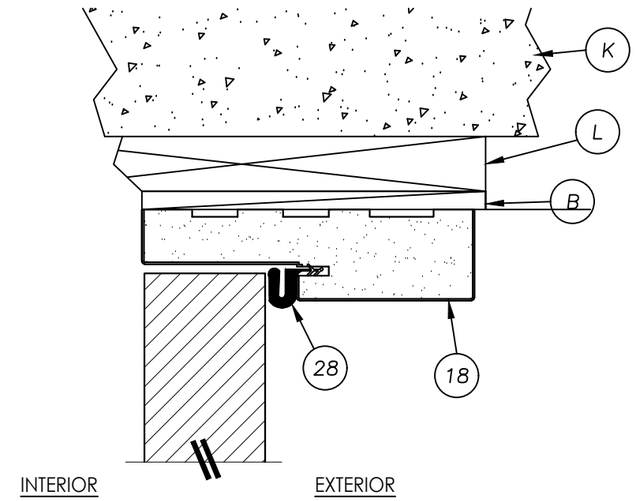

2/5 **VERTICAL CROSS SECTION**
Shown w/1X sub-buck

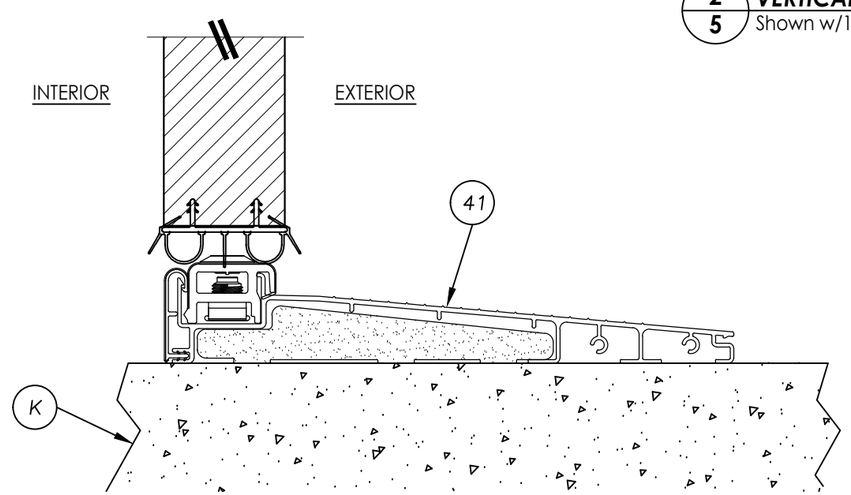

3/5 **VERTICAL CROSS SECTION**

Documents Prepared By:
Lyndon F. Schmidt
P.E. No. 43409

RW BUILDING CONSULTANTS, INC.
P.O. Box 230, Valrico, FL 33595
Phone No.: 813.659.9197
FBPE Registry No. 9813

PRODUCT: DUNBARTON ACHIEVER "ES" INSWING "NON-IMPACT"

PART OR ASSEMBLY: VERTICAL CROSS SECTIONS

REVISIONS

NO.	DATE		BY
4	7/06/23	UPDATE TO 8TH ED. (2023) FBC	LFS
3	8/11/20	UPDATE TO 7th ED. (2020) FBC	DAC
2	9/29/17	UPDATE TO 6TH ED. (2017) FBC	LFS
1	3/23/15	UPDATE TO 5TH ED. (2014) FBC	JK

DATE: 3/14/12
SCALE: N.T.S.
DWG. BY: JK
CHK. BY: LFS
DRAWING NO.: FL-15362.7
SHEET 5 OF 8

© 2012 R.W. BUILDING CONSULTANTS INC.

G:\2023 FBC DRAWINGS\Dunbarton Corp\FL-15362 R4 Achiever\FL-15362.7-12.dwg

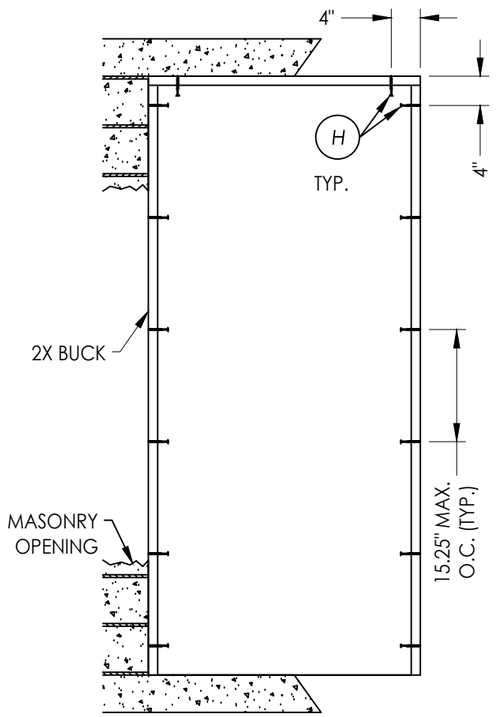

BUCK ANCHORING

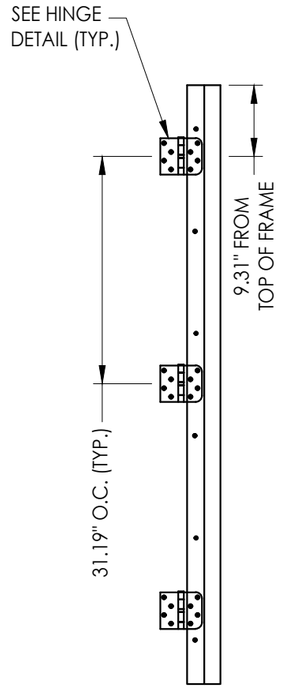

HINGE LOCATIONS

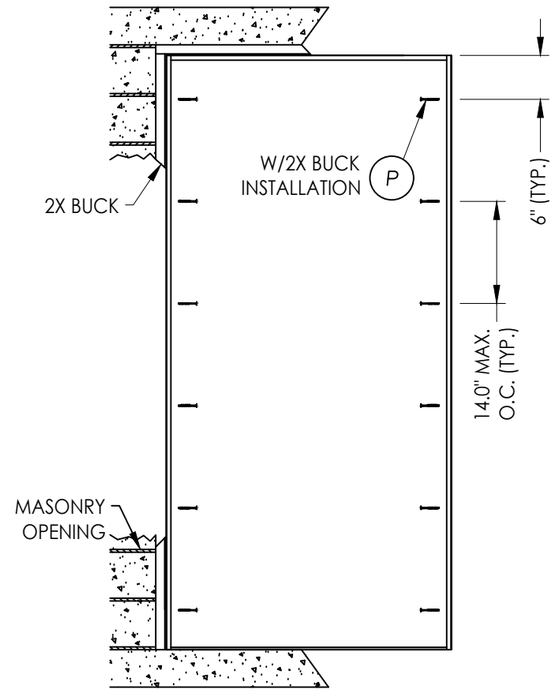

FRAME ANCHORING

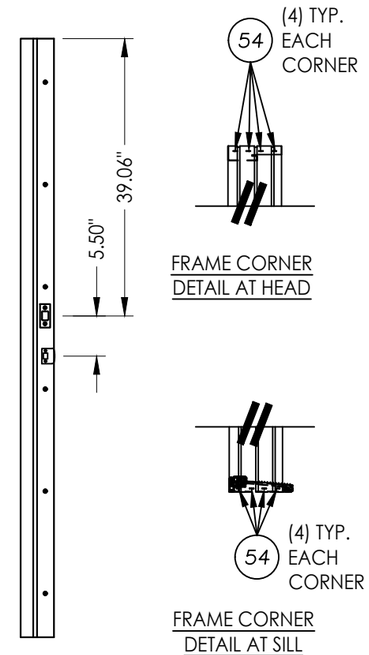

FRAME CORNER DETAIL AT HEAD

FRAME CORNER DETAIL AT SILL

LATCH & DEADBOLT LOCATIONS

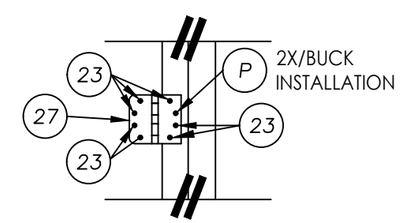

HINGE DETAIL WITH 2X BUCK

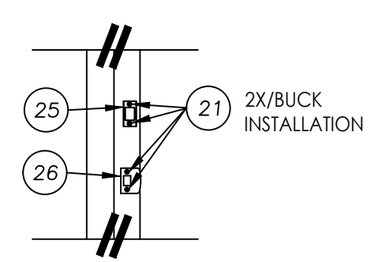

STRIKE DETAIL

CONCRETE ANCHOR NOTES:

1. *Concrete anchor locations at the corners may be adjusted to maintain the min. edge distance to mortar joints.*
2. *Concrete anchor locations noted as "MAX. ON CENTER" must be adjusted to maintain the min. edge distance to mortar joints, additional concrete anchors may be required to ensure the "MAX. ON CENTER" dimension are not exceeded.*
3. *Concrete anchor table:*

ANCHOR TYPE	ANCHOR SIZE	MIN. EMBEDMENT	MIN. CLEARANCE TO MASONRY EDGE	MIN. CLEARANCE TO ADJACENT ANCHOR
ITW TAPCON®	1/4"	1-1/4"	2"	4"
DeWALT ULTRACON+®	1/4"	1-1/4"	1"	4"

WOOD SCREW INSTALLATION NOTES:

1. *Maintain a minimum 5/8" edge distance, 1" end distance, & 1" o.c. spacing of wood screws to prevent the splitting of wood.*

Documents Prepared By:
Lyndon F. Schmidt
P.E. No. 43409
RW BUILDING CONSULTANTS, INC.
P.O. Box 230, Valrico, FL 33595
Phone No.: 813.659.9197
FBPE Registry No. 9813

PRODUCT: *DUNBARTON ACHIEVER "ES" INSWING "NON-IMPACT"*

PART OR ASSEMBLY: *BUCK & FRAME ANCHORING 2X WOOD BUCK*

REVISIONS

NO.	DATE		BY
4	7/06/23	UPDATE TO 8TH ED. (2023) FBC	LFS
3	8/11/20	UPDATE TO 7TH ED. (2020) FBC	DAC
2	9/29/17	UPDATE TO 6TH ED. (2017) FBC	LFS
1	3/23/15	UPDATE TO 5TH ED. (2014) FBC	JK

DATE: 3/14/12
SCALE: N.T.S.
DWG. BY: JK
CHK. BY: LFS
DRAWING NO.: FL-15362.7
SHEET 6 OF 8

© 2012 R.W. BUILDING CONSULTANTS INC.

G:\2023 FBC DRAWINGS\Dunbarton Corp\FL-15362 R4 Achiever\FL-15362.7-12.dwg

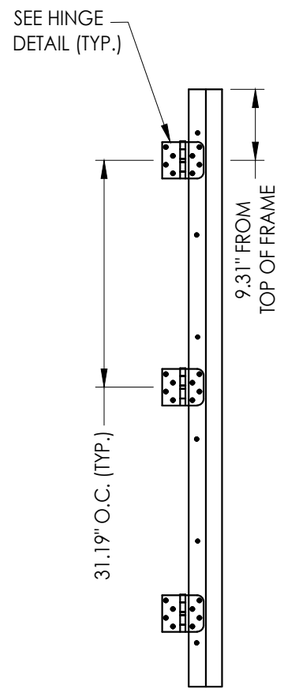

HINGE JAMB

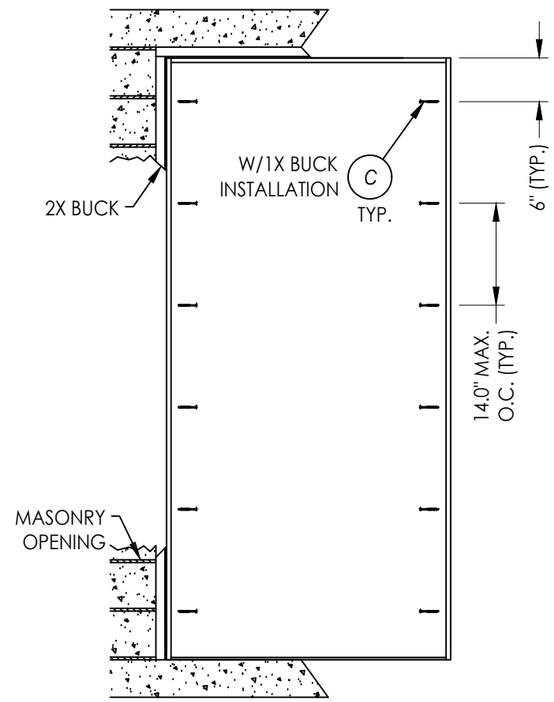

FRAME ANCHORING

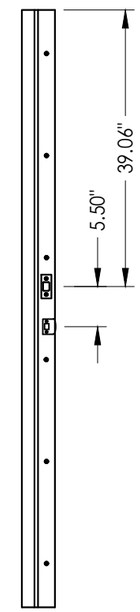

STRIKE JAMB

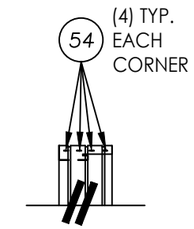

FRAME CORNER DETAIL AT HEAD

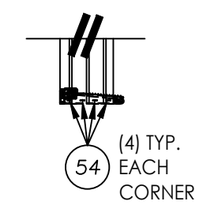

FRAME CORNER DETAIL AT SILL

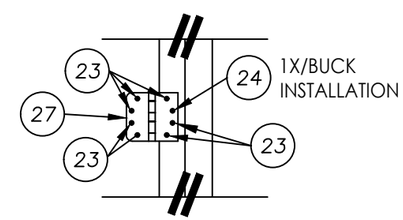

HINGE DETAIL WITH 1X BUCK

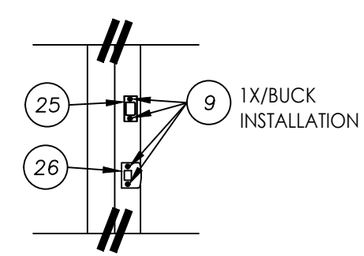

STRIKE DETAIL

CONCRETE ANCHOR NOTES:

1. *Concrete anchor locations at the corners may be adjusted to maintain the min. edge distance to mortar joints.*
2. *Concrete anchor locations noted as "MAX. ON CENTER" must be adjusted to maintain the min. edge distance to mortar joints, additional concrete anchors may be required to ensure the "MAX. ON CENTER" dimension are not exceeded.*
3. *Concrete anchor table:*

ANCHOR TYPE	ANCHOR SIZE	MIN. EMBEDMENT	MIN. CLEARANCE TO MASONRY EDGE	MIN. CLEARANCE TO ADJACENT ANCHOR
ITW TAPCON®	1/4"	1-1/4"	2"	4"
DeWALT ULTRACON®	1/4"	1-1/4"	1"	4"
ITW TAPCON®	3/16"	1-1/4"	3"	1-1/2"

WOOD SCREW INSTALLATION NOTES:

1. *Maintain a minimum 5/8" edge distance, 1" end distance, & 1" o.c. spacing of wood screws to prevent the splitting of wood.*

Documents Prepared By:
Lyndon F. Schmidt
P.E. No. 43409
RW BUILDING CONSULTANTS, INC.
P.O. Box 230, Valrico, FL 33595
Phone No.: 813.659.9197
FBPE Registry No. 9813

PRODUCT: *DUNBARTON ACHIEVER "ES" INSWING "NON-IMPACT"*

PART OR ASSEMBLY: *FRAME ANCHORING – 1X WOOD BUCK*

REVISIONS

NO.	DATE		BY
4	7/06/23	UPDATE TO 8TH ED. (2023) FBC	LFS
3	8/11/20	UPDATE TO 7TH ED. (2020) FBC	DAC
2	9/29/17	UPDATE TO 6TH ED. (2017) FBC	LFS
1	3/23/15	UPDATE TO 5TH ED. (2014) FBC	JK

DATE: 3/14/12
SCALE: N.T.S.
DWG. BY: JK
CHK. BY: LFS
DRAWING NO.: FL-15362.7
SHEET 7 OF 8

© 2012 R.W. Building Consultants Inc.

G:\2023 FBC DRAWINGS\Dunbarton Corp\FL-15362 R4 Achiever\FL-15362.7-12.dwg

BILL OF MATERIALS

ITEM #	DESCRIPTION	MATERIAL
A	2X BUCK SG >= 0.55	WOOD
B	1/4" MAX. SHIM SPACE	WOOD
C	1/4" X 3-3/4" DeWALT OR ITW PFH CONCRETE SCREWS	STEEL
H	1/4" X 2-3/4" DeWALT OR ITW CONCRETE SCREWS	STEEL
K	MASONRY - 3,000 PSI MIN. CONCRETE CONFORMING TO ACI 301 OR HOLLOW BLOCK CONFORMING TO ASTM C90	CONCRETE
L	1X BUCK SG >= .55	WOOD
P	#10 x 2-1/2" PFH WOOD SCREWS (1-1/8" MIN. EMBEDMENT)	STEEL
9	3/16" X 3-1/4" ITW PFH CONCRETE SCREWS	STEEL
18	POLY FIBER JAMB (World Wide Door Comp.)	COMP
20	SEALANT	SILICONE
21	#8 X 2-1/4" PFH W.S.	STEEL
23	#10 X 3/4" PFH WOOD SCREW	STEEL
24	1/4" X 3-1/4" ITW PFH CONCRETE SCREWS	STEEL
25	DEADBOLT STRIKE PLATE	STEEL
26	LATCH STRIKE PLATE	STEEL
27	HINGE	STEEL
28	WEATHERSTRIP	FOAM
41	INSWING THRESHOLD (ENDURA)	ALUM./COMP
54	3/8" X 2" X .055" STAPLE	STEEL

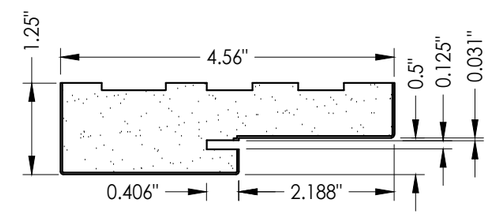

18 ***POLY FIBER JAMB***
(World Wide Door Comp.)

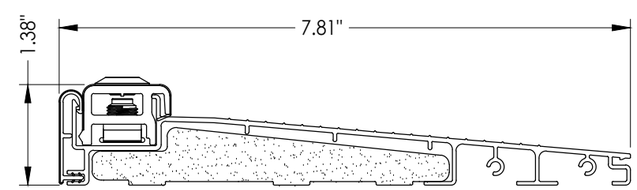

41 ***INSWING THRESHOLD***
Endura

Documents Prepared By:
Lyndon F. Schmidt
P.E. No. 43409

R.W. BUILDING CONSULTANTS, INC.
P.O. Box 230, Valrico, FL 33595
Phone No.: 813.659.9197
FBPE Registry No. 9813

PRODUCT: *DUNBARTON ACHIEVER "ES" INSWING "NON-IMPACT"*

PART OR ASSEMBLY: *BILL OF MATERIALS & COMPONENTS*

NO.	DATE	REVISIONS	BY
4	7/06/23	UPDATE TO 8TH ED. (2023) FBC	LFS
3	8/11/20	UPDATE TO 7th ED. (2020) FBC	DAC
2	9/29/17	UPDATE TO 6TH ED. (2017) FBC	LFS
1	3/23/15	UPDATE TO 5TH ED. (2014) FBC	JK

DATE: 3/14/12
SCALE: N.T.S.
DWG. BY: JK
CHK. BY: LFS
DRAWING NO.: FL-15362.7
SHEET 8 OF 8

© 2012 R.W. Building Consultants Inc.

G:\2023 FBC DRAWINGS\Dunbarton Corp\FL-15362 R4 Achiever\FL-15362.7-12.dwg